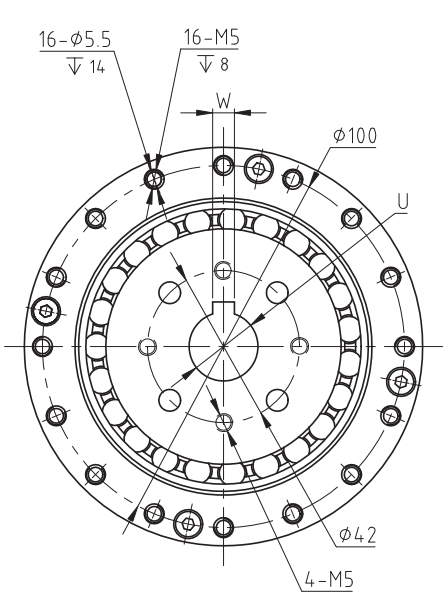

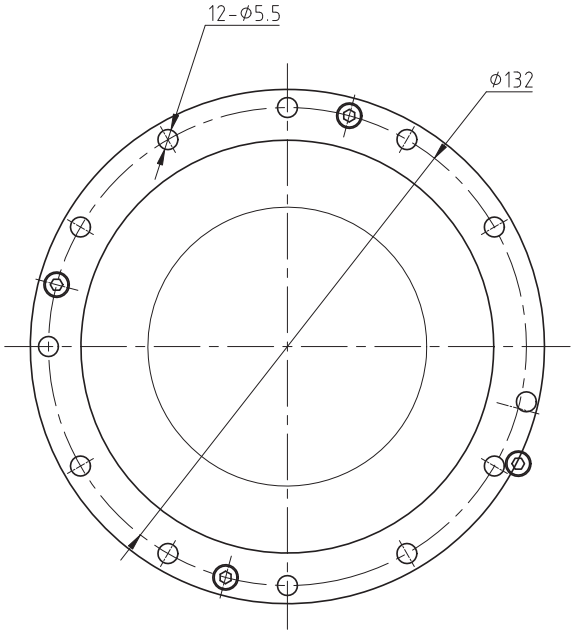

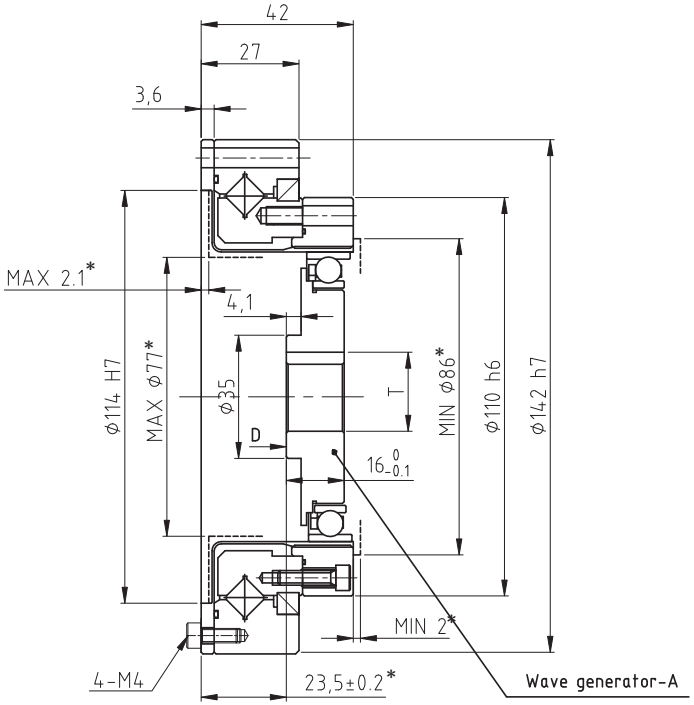

Technical requirements:

1、Please use our specified grease;

2、Dimensions with * in the drawing are installation reference dimensions, please follow this installation dimension requirement;

3、Please use the delivery specification drawing to confirm the details of the dimensions.

D 向

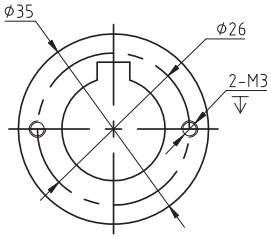

型号/MODEL	U	T	W
Wave generator-A φ14	φ14H7	$16.3^{+0.1}_{0}$	5JS9/P9
Wave generator-A φ19	φ19H7	$21.8^{+0.1}_{0}$	6JS9/P9
Wave generator-A φ22	φ22H7	$24.8^{+0.1}_{0}$	6JS9/P9
		$25.3^{+0.1}_{0}$	8JS9/P9

HST-32-XX-U-I	Harmonic Drive Model 32
Homwing	Shenzhen homwing technology co.,ltd

型号 Model	速比 Reduction ratio	输入2000r/min时的额定转矩 Rated torque at 2000r/min input		起动停止时的容许峰值转矩 Permissible peak torque at start and stop		平均负载转矩的容许最大值 Permissible maximum value for average load torque		瞬间容许最大转矩 Permissible maximum momentary torque		容许最高输入转速(脂润滑) Permissible maximum input rotational speed(Grease)	容许平均输入转速(脂润滑) Permissible average input rotational speed(Greaae)	背隙 Backlash	重量 weight	设计寿命 Desian life
		Nm	kgfm	Nm	kgfm	Nm	kgfm	Nm	kgfm	r/min	r/min	Arc Sec	kg	Hour
32	50	76	7.8	216	22	108	11	382	39	4800	3500	≤20	HST-I:2.56	10000
	80	118	12	304	31	167	17	568	58					15000
	100	137	14	333	34	216	22	647	66					15000
	120	137	14	353	36	216	22	686	70					15000